第 24 卷第 9 期 半 导 体 学 报 Vol. 24, No. 9
2003 年 9 月 CHINESE JOURNAL OF SEMICONDUCTORS Sep., 2003

Realization of Fully Differential Fourth-Order Bessel Filter with Accurate Group Delay*

Jiang Jinguang, He Yigang and Wu Jie

(*College of Electrical and Information Engineering, Hunan University, Changsha 410082, China*)

Abstract: A fully differential R-MOSFET-C fourth-order Bessel active lowpass filter employing fully differential operational amplifier, passive resistors, and current-steering MOS transistors as a variable resistor is proposed. This proposed implementation relies on the tunability of current-steering MOS transistors operating in the triode region counteracting the concert deviation of resistor in the integrated circuit manufacturing technology in order that the group delay of Bessel active filter could be designed accurately. The amplifier is not only with voltage common-mode negative feedback, but also with current common-mode negative feedback, which will benefit for the stability of its DC operating point. 0.75μs group delay fourth-order Bessel lowpass filter, which is synthesized according to passive doubly terminated RLC prototype lowpass filter, demonstrates better than −65dB THD using 100kHz, 2.5 V_{pp} signal in Taiwan UMC 2P2M (2-poly, 2-metal) 5.0V, 0.5μm CMOS technology.

Key words: fully differential; voltage and current common-mode negative feedback; frequency tunable; R-MOSFET-C filter; Bessel filter

EEACC: 1270

CLC number: TN713.1 **Document code:** A **Article ID:** 0253-4177(2003)09-0927-06

1 Introduction

Recently, the research on the integrated continuous-time filter becomes more attractive in academic field of circuit and system. It has been applied in communication integrated circuit successfully, for example, asymmetrical digital subscriber loops (ADSL) and GSM baseband I/O port integrated circuit etc[1~7]. Generally, the design of active filter may employ the structure of RC-opamp, or G_m-C etc, but the cutoff frequency of the designed filter based on RC-opamp is not easy for tuning because there exists concert deviation of resistances in integrated circuit manufacturing technology. It is difficult to get more accurate cutoff frequency of the filter. The cutoff frequency of active filter based on G_m-C could be tunabled through adjusting the G_m value of transconductor-amplifier. However, due to the nature of open-loop operation, G_m-C filters usually perform poorly as far as linearity is concerned. So its practical uses are limited.

For accurate designing group delay based GSM baseband I/O port integrated circuit application, Bessel filter with frequency accuracy of ±1% is required. A tunable CMOS Bessel filter is investigated through adjusting the gate voltages of MOS transistor

* Project supported by National Natural Science Foundation of China (No. 50277010)

Jiang Jinguang male, was born in 1969, PhD candidate. His current interests are in the design of low-power and low-voltage analog and mixed analog-digital integrated circuits for telecom application.

He Yigang male, was born in 1966, PhD, professor. His interests are in theory and design of analog integrated circuits, failure diagnostic of analog circuits, and theory and application of neural network.

Wu Jie male, was born in 1957, PhD, professor. He is engaged in the research on circuit analysis.

Received 24 October 2002, revised manuscript received 21 April 2003

resistors which operate in triode region to counteract the concert deviation of passive resistor in the integrated circuit manufacturing. Fully differential topology of the filter is used to obtain better performance of common-mode rejection ratio(CMRR). Since the design of active filter is directly derived from passive LCR prototype, this proposed technique is also suitable for practical design of various types of filters.

The fourth-order Bessel filter presented here is designed for a mobile phone application operating with a power supply of 5.0V. The filter is used in transmitter as a smoothing filter for I and Q modulated signals coming out from the digital to analog converters. Maximum total harmonic distortion (THD) of −65dB is required for a 2.5 V_{pp} input signal. The filter must have a small DC gain variation and a constant group delay in order to not influence the GMSK modulated signal spectrum. Excellent gain and phase matching between the I and Q channels are also required to avoid additional sideband frequency components when generating the RF signal.

2 Fully differential op amp and R-MOSFET-C first-order filter

2.1 Fully differential op amp

Operational amplifier is the most important active device of continuous-time filter[8,9]. Two-stage fully differential operational amplifier with approximately 83.2dB DC gain, 32MHz unity-gain bandwidth, 92 degree phase margin, and 36dB gain margin when the load is 5pF (from simulation) are used in the filter. A high-gain amplifier employing cascode structure is chosen to reduce the distortion of the filter. The operational amplifier with its frequency compensation network (standard Miller compensation employing resistor R and capacitor C component will widen the GBW of the amplifier) is shown in Fig. 1. Transistor M1 and M2 are used as the first amplifying stage. Transistor M3 and M4 are used as the second amplifying stage.

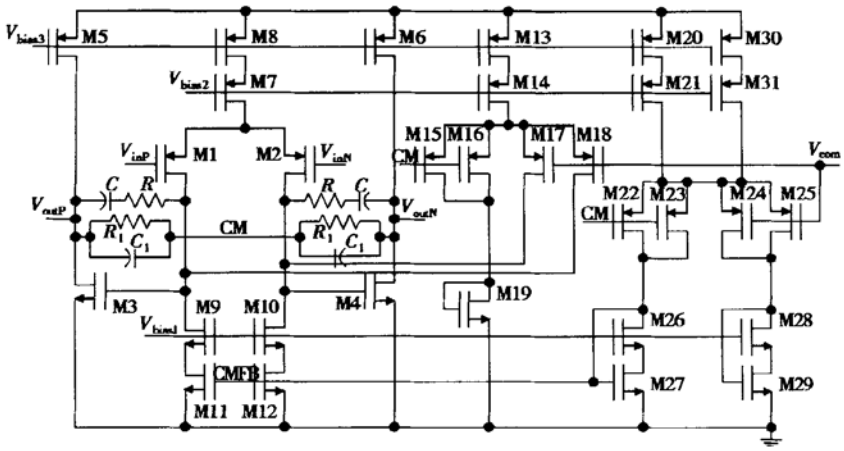

Fig. 1 Two-stage fully differential op amp

Fully differential op amp shown in Fig. 1 has not only voltage common-mode negative feedback circuit (M22~M25), but also current common-mode negative feedback circuit (M15~M18) which will be benefit for the stability of DC operating point. It will operate at a 5.0 power supply and the common-mode voltage (V_{com}) is 2.5V, and simulation results (shown in Fig. 2) will show the open-loop amplitude-frequency and phase-frequency response of fully differential op amp.

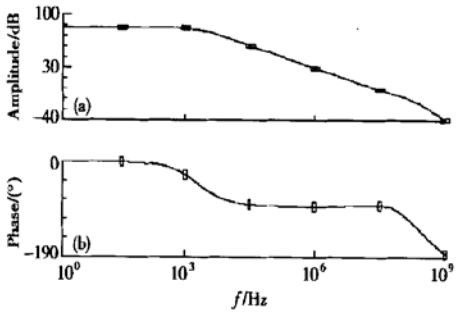

Fig. 2 Measured amplitude (a) and phase-frequency response (b) of fully differential op amp

2.2 R-MOSFET-C first-order lowpass filter based on triode-operated MOS transistors

A differential balanced variable resistor made of eight identical MOS transistors M1 ~ M8 biased in triode region combined with four passive resistors is shown in Fig. 3. The resistance (inherently conductance) of the current steering portion (MOSFETs) is set by any control voltage difference of V_{conP} and V_{conN}. The R-MOSFET stage has an equivalent resistance of the sum of R_1 and R_{eq}. For analysing the circuit in concision, we will employ the half circuit of Fig. 3, as shown in Fig. 4.

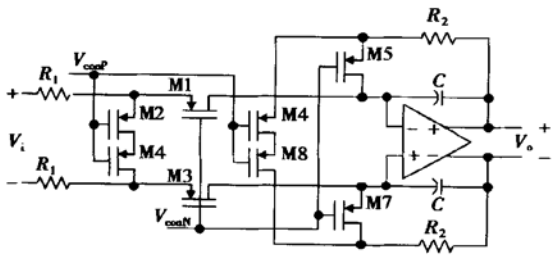

Fig. 3 R-MOSFET-C first-order lowpass filter

The combined circuit block of the R-MOSFET stage of Fig. 3 in conjunction with an op amp with feedback capacitors is a low distortion R-MOSFET-C first-order lowpass filter, shown in Fig. 4. The first-order lowpass filter displays a linearly controlled unity-gain frequency when resistor R_1 is identical with R_2.

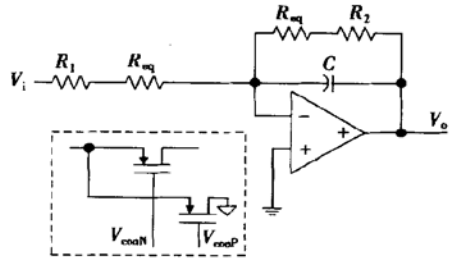

Fig. 4 Half circuit of Fig. 3 (R-MOSFET-C first-order lowpass filter)

The MOSFET devices M1 ~ M8 in Fig. 3 can be viewed as current-steering devices operating in the triode region, rather than as "resistors". From Fig. 4, we can conclude the equation as follows:

$$\frac{V_o}{V_i} = -\frac{\frac{R_2 + R_{eq}}{R_1 + R_{eq}} \times \frac{1}{(R_2 + R_{eq})C}}{S + \frac{1}{(R_2 + R_{eq})C}} \tag{1}$$

where the resistance value of R_1 is equal to that of R_2. This can also be expressed as

$$\frac{V_o}{V_i} = -\frac{\frac{1}{(R + R_{eq})C}}{S + \frac{1}{(R + R_{eq})C}} \tag{2}$$

Note that the resistance value R_{eq} will change by varying the differential control voltage ($V_{conP} - V_{conN}$), and the cutoff frequency of the first-order lowpass filter will be tuning accordingly.

3 Accurate design of fourth-order fully differential 0.75μs group delay Bessel lowpass filter

Requirement:

(1) 0dB passband gain, 0.75μs group delay;

(2) Fourth-order fully differential lowpass Bessel filter.

From above requirement, we will gain the following active fourth-order Bessel filter with 0dB gain and 0.75μs group delay.

As discussed in section 2 with a particular focus on the R-MOSFET portion, each of the resistors in an active RC filter needs to be changed to a variable re-

sistor R-MOSFET, resulting in a highly linear R-MOSFET-C implementation. The R-MOSFET combination R summing MOS transistor which operates in triode region represents a sum that is equal to the original single resistors, and attain the goal of accurately designing the group delay of the Bessel filter.

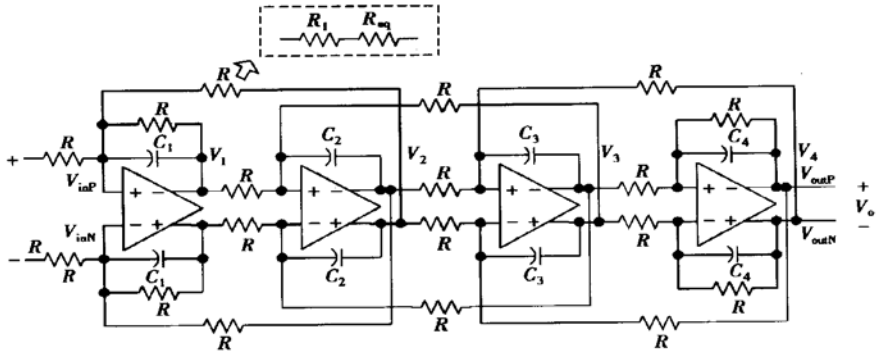

Fig. 5 Active fully differential fourth-order lowpass filter

4 Experimental results

The fully differential Bessel lowpass filter is fabricated using Taiwan UMC 2P2M 0.5μm CMOS technology. The active chip area of the filter is about 0.32mm^2, which is much smaller than that in Ref. [1], the power consumption of the filter is about 13.3mW at 5.0V power supply.

Figure 6 shows the measured 0.75μs group delay of the filter, which fits well with the ideal theoretical circumstance. The measured frequency response of the filter, which has a tuning range of almost ten decade

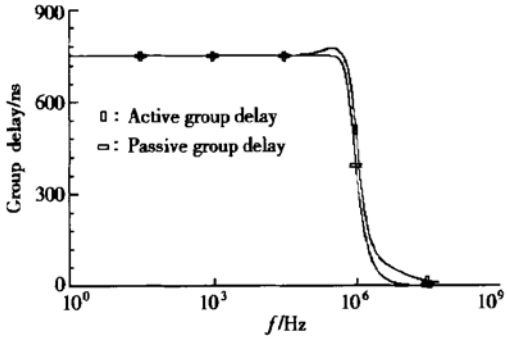

Fig. 6 0.75μs ideal and practical 4th-order Bessel filter group delay

from 20kHz to 575kHz, is given in Fig. 7. It has much larger tuning range than that in Ref. [1]. The measured inband gain variation for each tuned frequency is about 0.01dB. The measured output spectrum of the filter for a 2.5 V_{pp} sinewave of 100kHz, a THD of less than −65dB is achieved. The common-mode rejection ratio of the filter is better than −90dB.

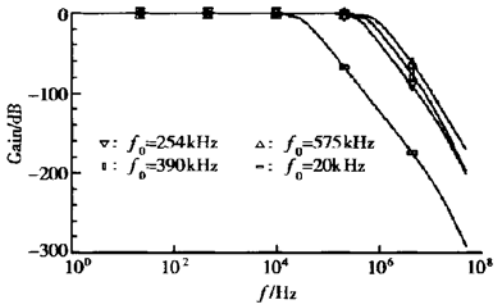

Fig. 7 Measured filter frequency responses showing the tuning of the cutoff frequency at 20, 254, 390, and 575kHz

The measured performance of the filter are summarized in Table 1. A chip photomicrograph is shown in Fig. 8.

Table 1 Summary of measured performance of Bessel filter

−3dB frequency		520kHz
Tuning range		20~575kHz
Inband gain variation		< 0.01dB
Deviation of group delay (< 500kHz)		< 25ns
THD(@100kHz and V_{in}< 2 V_{pp})		< −55dB
CMRR		> 60dB
PSRR(DC)	Positive supply	80dB
	Negative supply	90dB
Chip area		0.32mm^2
Power supply		5.0V
Power consumption		13.3mW

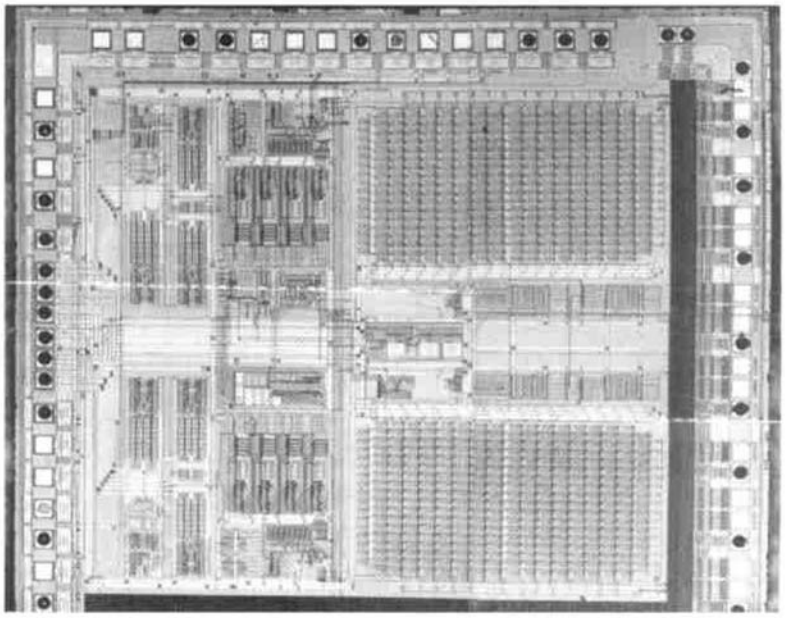

Fig. 8 Chip micrograph of fourth-order Bessel filter

The chip shown in Fig. 8 includes three parts: channel 12-bit current-steering DAC, fully differential fourth-order lowpass Bessel filter, and driver which are all with I and Q channels.

5 Conclusion

This paper describes a fully differential R-MOSFET-C lowpass filter, which group delay could be designed accurately through tuning gate voltage of MOS transistors operated in triode region in order to change value of the variable resistor. A fourth-order Bessel lowpass filter is designed. The measured THD @ 100kHz is only − 65dB with 2.5 V_{pp} input signal. Frequency tuning provides more than ten decade wide range of the filter from 20kHz to 575kHz. The 0.5μm CMOS filter measures 0.32mm^2 and consumes 13.3mW with a single 5.0V power supply.

References

[1] Yang Fuji, Enz C C. A low-distortion BICMOS seventh-order Bessel filter operating at 2.5V supply. IEEE J Solid-State Circuits, 1996, 31(3): 321

[2] Chang Zhongyuan, Haspelagh D, Verfaillie J. A highly linear CMOS G_m-C bandpass filter with on-chip frequency tuning. IEEE J Solid-State Circuits, 1997, 32(3): 388

[3] Chang Zhongyuan, Macq D, Haspeslagh D, et al. A CMOS analog front-end circuit for FDM-based ADSL system. IEEE J Solid-state Circuits, 1995, 30(12), 1449

[4] Khoury J M. Design of 15-MHz CMOS continuous-time filter with on-chip tuning. IEEE J Solid-State Circuits, 1991, 26(12): 1988

[5] Groenewold G. Low-power MOSFET-C 120MHz Bessel filter with on-chip tuning. IEEE Proc Circuits, Devices Syst, 2000, 147(2): 28

[6] Schmid H P, Moschytz G S. Active-MOSFET-C single amplifier biquadratic filters for video frequencies. IEEE Proc Circuits, Devices Syst, 2000, 147(2): 35

[7] Silva-Martinz J, Steyaert M, Sansen W. A 10.7MHz 68-dB SNR CMOS continuous-time filter with on-chip tuning. IEEE J Solid-States Circuits, 1992, 27(12): 1843

[8] Hollman T, Lindfors S, Lansirinne M, et al. A 2.7-V CMOS dual-mode baseband filter for PDC and WCDMA. IEEE J Solid-State Circuits, 2001, 36(7): 1148

[9] Wu J, El-Marsy E. Current-mode ladder filters using multiple output current conveyors. IEEE Proc Circuit, Devices Syst, 1996, 143(4): 218

[10] Zhao Luhuai, Qiu Guanyuan. Realization of high frequency integrated filter employing log-domain current-mode integrator. Chinese Journal of Circuit and System, 1996, 1(3): 32(in chinese) [赵录怀, 邱关源. 用对数域电流模式积分器实现的高频集成滤波器. 电路与系统学报, 1996, 1(3): 32]

[11] Zhao Luhuai, Qiu Guanyuan. A new current-mode continuous-time active wave filter. Chinese Journal of Electronics, 1997, 25(4): 108(in Chinese) [赵录怀, 邱关源. 一种新型电流模式连续时间波有源滤波器. 电子学报, 1997, 25(4): 108]

[12] Zhao Luhuai, Qiu Guanyuan. Illation of current-mode high-order

filter. Chinese Journal of Electronic and Information, 1997, 13(3): 424(in Chinese) [赵录怀, 邱关源. 电流模式高阶滤波器设计的递推方法. 电子科学学刊, 1997, 13(3): 424]

[13] Shi Wenxiao, Han Qingquan. Fully differential leap-frog filter based on multiple output current conveyor. Chinese Journal of Communication, 2000, 21(2): 30(in Chinese) [石文孝, 韩庆全. 基于多输出差动差分电流传送器跳耦结构滤波器. 通信学报, 2000, 21(2): 30]

[14] Jiang Jinguang, He Yigang, Wu Jie. Design of elliptic function filter based on current conveyor. Chinese Journal of Circuit and System, 2000, 5(1): 32(in Chinese) [江金光, 何怡刚, 吴杰. 基于电流传送器的椭圆函数滤波器设计. 电路与系统学报, 2000, 5(1): 32]

[15] He Yigang, Jiang Jinguang, Wu Jie. Universal active current-mode filter. Chinese Journal of Electronics, 1999, 27(11): 21(in Chinese) [何怡刚, 江金光, 吴杰. 通用有源电流模式滤波器. 电子学报, 1999, 27(11): 21]

全差分群时延可精确调节的四阶 Bessel 滤波器实现*

江金光 何怡刚 吴 杰

(湖南大学电气与信息工程学院, 长沙 410082)

摘要: 采用全差分运算放大器、无源电阻以及用作可变电阻的 MOS 管设计实现了全差分 R-MOSFET-C 四阶 Bessel 有源低通滤波器, 在所提出的电路中通过调节工作在线性区的 MOS 管有源电阻的阻值以抵消集成电路制造工艺过程中电阻阻值的一致性偏差, 达到 Bessel 滤波器的群时延值得到精确设计的目的. 该滤波器中所采用的全差分运算放大器不仅具备有电压共模负反馈, 而且还具有电流共模负反馈, 极有利于电路静态工作点的稳定. 通过无源双端 RLC 原型低通滤波器导出的 0.75μs 群时延四阶 Bessel 滤波器, 采用台湾联电(UMC) 2 层多晶硅、2 层金属(2P2M)、5.0V 电源电压、0.5μm CMOS 工艺制造, 在输入信号为 100kHz、2.5 V_{pp}时, 其谐波失真(THD) 值低于 -65dB.

关键词: 全差分式; 电压、电流共模负反馈(CMFB); 频率可调性; R-MOSFET-C 滤波器; Bessel 滤波器

EEACC: 1270

中图分类号: TN713.1 **文献标识码**: A **文章编号**: 0253-4177(2003)09-0927-06

* 国家自然科学基金资助项目(批准号: 50277010)

江金光 男, 1969 年出生, 博士研究生, 研究方向为信号处理、低电压/低功率模拟集成电路设计等.

何怡刚 男, 1966 年出生, 博士, 教授, 博士生导师, 目前主要从事模拟集成电路、滤波器、故障诊断等领域的研究.

吴 杰 男, 1957 年出生, 博士, 教授, 博士生导师, 主要从事电路理论的研究工作.

2002-10-24 收到, 2003-04-21 定稿