第 27 卷 第 4 期
2006 年 4 月

半 导 体 学 报
CHINESE JOURNAL OF SEMICONDUCTORS

Vol. 27 No. 4
Apr. ,2006

An Optoelectronic Pulse Frequency Modulation Circuit for Retinal Prosthesis *

Liu Jinbin†, Chen Hongda, Gao Peng, Pei Weihua, and Sui Xiaohong

(State Key Laboratory of Integrated Optoelectronics, Institute of Semiconductors, Chinese Academy of Sciences, Beijing 100083, China)

Abstract: A pulse frequency modulation (PFM) circuit for retinal prosthesis, which generates electrical pulses with frequency proportional to the intensity of incident light, is presented. The fundamental characteristic of the circuit is described and analyzed. The circuit is realized in 0.6μm CMOS process, and the simulation results testify to the possibility of sub-retinal implantation.

Key words: retinal prosthesis; sub-retinal implant; pulse frequency modulation
EEACC: 4250; 2570D
CLC number: TN36 **Document code:** A **Article ID:** 0253-4177(2006)04-0700-05

1 Introduction

Thousands of people suffer from retina degeneration due to retinitis pigmentosa (RP) and age-related macular degeneration (AMD). Although the photoreceptors are degenerated in such cases, parts of the retina still work properly. In vivo and in vitro studies show that electrical stimulation can induce electrical potential in the retina. This has prompted researchs on retinal prosthesis, which are based on electrical stimulation by implanted chips.

There are two approaches to placing retinal prosthesis devices[1]. In the first one, the epi-retinal implant, the devices are placed in contact with the nerve fiber layer, and the electrical stimulation is delivered to the ganglion cells of the retina; in the other, the sub-retinal implant, the devices are implanted beneath the retina, and the electrical stimulation is delivered to the bipolar cells of the retina, as shown in Fig. 1. Due to its simple structure and high resolution, the sub-retinal implant is preferred in our research.

Sub-retinal implants are traditionally implemented by MPDA (micro photodiode array), with which the photoreceptor cells of the retina are replaced[2]. Unfortunately, the electrical signals generated by this optoelectronic device entirely depend on the incident optical power, which may not be strong enough to induce an electrical potential in the retina. In contrast to the MPDA, the PFM circuit[3~6] generates a series of electrical pulses with frequency proportional to the incident optical power. The frequencies of the generated electrical pulses range from a few tens of Hz to a few tens of kHz. The pulses provide a voltage swing as great as the supply, whose driving ability is much better than that of MPDA. Generally, it consists of a photosensor, an image processing unit, and a stimulus unit. The total area of the circuit is about 500μm × 500μm, and the operating voltage is between 2.5～5V. An array of such active components integrated on one chip has been proven to be suitable for retinal prosthesis. A drawback of PFM is the required inner

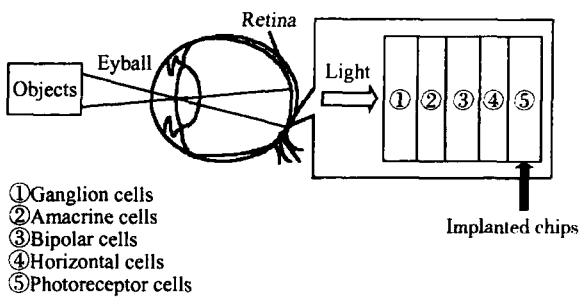

Fig. 1 Concept diagram of implanted chips in sub-retinal space

* Project supported by the National Natural Science Foundation of China (No. 60536030) and the National High Technology Research and Development Program of China (No. 2005AA311030)

† Corresponding author. Email: jinbinliu@semi.ac.cn

Received 15 November 2005, revised manuscript received 20 January 2006

supply, but this can be solved by the telemetry link method[7].

However, the devices presented in Refs. [3～6] are not fit for implantation due to their complicated structures and large areas. Some of them even require external synchronous clock signals. Therefore we have modified the basic PFM circuit with the goals of simple structure and high-density integration.

2 Structure description

Figure 2 shows the basic structure of one pixel of a PFM circuit, which consists of a photodiode (PD), a Schmitt trigger (ST), a delay cell, and a charging part. When there is no incident light, the circuit remains stable. When there is incident light, the parasitic capacitor at the input will be charged or discharged corresponding to the initial state of the output. At the same time, the voltage of the PD will change, leading to the transversion of the ST corresponding to its transfer characteristic, and so will the output voltage after a delay period. Then the feedback of the output voltage determines the action of charging or discharging at the input in turn, and thus the whole circuit will keep oscillating. The delay cell is used to shape the output pulse.

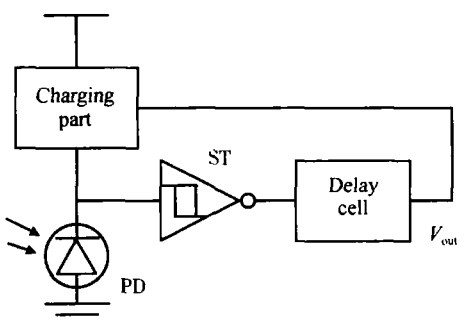

Fig. 2　Block diagram of PFM circuit

The PFM circuit is implemented in standard CMOS process, and hence a process-compatible photodiode is needed. As shown in Fig. 3, the diode formed by the n-well-to-p-substrate junction is adopted as the photodiode, due to its good absorption of light at long wavelengths. For higher responsivity, an interdigitated network of n^+ fingers is employed as the cathode instead of a continuous n^+ region in order to maximize the depletion regions available for carrier collection, and the substrate is connected as the anode.

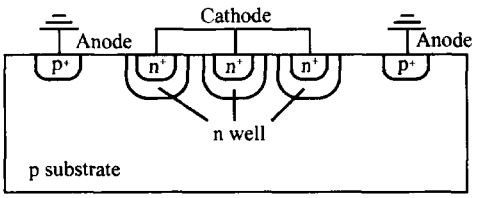

Fig. 3　Schematic cross-section of n-finger photodiode

The charging part is formed by two cascaded n-type MOS transistors instead of one single transistor to decrease the drain-source current, leading to a better width of the output pulse.

Two series inverters are implemented in the delay cell. To improve the delaying effect, a pair of parallel complementary MOS capacitors placed at each output node of the inverters is employed. It is formed by a pMOS and an nMOS transistor, which are connected to V_{DD} and GND respectively.

3 Circuit analysis and design

The PFM circuit schematic is shown in Fig. 4. We have modified the basic PFM circuit to make the pulse frequency and width suitable for retina stimulation. The ST is formed by M1～M6, the charging part is formed by Mr and Mx, and the delay cell is formed by two inverters consisting of M7～M10 and a pair of complementary capacitors consisting of Mc1～Mc4. A MOS capacitor Min is added at the input node to improve the pulse width.

3.1 Function of oscillation

Take V_{PD} as the anti-bias voltage of the PD, C_{in} as the total input capacitance at the cathode of the PD, I_0 as the drain-source current of Mr and Mx when they turn on, T_d as the delay of the inverter chain, and V_{hys} as the hysteresis of the ST. When there is incident light, Mr and Mx will turn on, and I_0 will charge C_{in} if the output voltage of the PFM is high. When I_0 is much larger than the photocurrent I_{ph}, V_{PD} turns high and soon exceeds the upper switching point voltage V_H of the ST. Then the output of the ST turns low, and after a delay of T_d, the output of the PFM also turns low, and therefore Mr and Mx turn off and C_{in} is discharged by I_{ph}, so that V_{PD} decreases, and at last it is less than the lower switching point voltage V_L, leading to a high voltage level at the output of the ST.

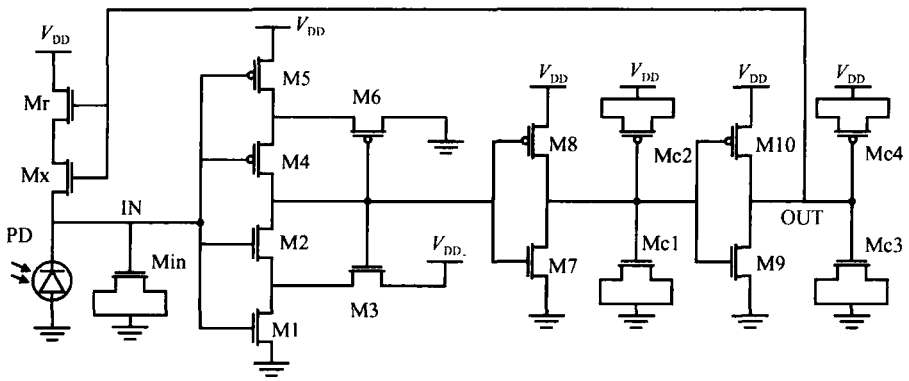

Fig. 4 Schematic of PFM circuit

Then the output of the PFM turns high again. Hence the PFM can oscillate via self-resetting.

3.2 Circuit design

During one period, the voltage change on the cathode of the PD is nearly equal to V_{hys}. Before C_{in} is discharged by I_{ph}, the charge accumulated on it can be expressed as $(C_{PD} + C_M + C_{ST})V_{hys}$, where C_{ST} and C_M represent the parasitic capacitance of the ST at the input node and the MOS capacitor, respectively. When I_0 is much larger than I_{ph}, the period of the pulse is mainly determined by the discharge time. Hence the period of the pulse can be expressed as

$$T_{PFM} = \frac{(C_{PD} + C_M + C_{ST})V_{hys}}{I_{ph}} \quad (1)$$

Whereas the charging time of C_{in} determines the pulse width, and the delay of the inverter chain cannot be neglected in comparison with the charging time, so the width of the pulse is

$$T_{pulse} = T_d + \frac{C_{PD} + C_M + C_{ST}}{I_0} \times V_{hys} \quad (2)$$

Taking R as the responsivity of PD, and P_{opt} as the incident optical power, then the photocurrent I_{ph} is

$$I_{ph} = RP_{opt} \quad (3)$$

Therefore the frequency of the photo-modulated pulse can be expressed as

$$f = \frac{1}{T_{PFM}} = \frac{RP_{opt}}{(C_{PD} + C_M + C_{ST})V_{hys}} \quad (4)$$

Thus the output pulse frequency is proportional to the intensity of incident light.

As the circuit tends to oscillate at a frequency higher than expected, it must be optimized to guarantee the required frequency range. The value of V_{hys} must be as big as possible first, and then C_{in} should be increased, so transistors connected with the input node should be enlarged to an acceptable extent. To improve the pulse width, I_0 should be reduced, so cascade transistors were implemented and Mr was realized with a long channel length and short channel width. In this way, a satisfactory frequency range can be achieved at the expense of area. However, a large area is not suitable for high density integration for use in prosthetic implants. Therefore the circuit design must face a trade-off between frequency and area.

4 Simulation results

The circuit was realized in CSMC-HJ 0.6μm 2P2M CMOS process. The photodiode was fulfilled by an n-well-to-p-substrate junction with an area of 4μm ×4μm. The capacitance of the photodiode is estimated to be about 5fF. Almost all of the MOS transistors have the minimum channel length to decrease the total area, and the supply voltage is 2V. The simulation was carried out under the Avant! Hspice circuit design environment at 25 ℃.

Figure 5 shows the transient waveform at a 20nA photocurrent. Figure 5(a) is the voltage waveform at the cathode of the photodiode, and Figure 5(b) is that at the output node, which is appropriate for retina stimulus.

The output of a PFM pixel should be connected with an electrode contacted with the retina. The electrode-retina interface can be modeled by a high-pass filter[8]. A simulated functional diagram of a biphasic stimulus signal acquired at the retina is

shown in Fig. 6. The left one models the voltage delivered to the retina ,and the right one models the stimulus current injected into the retina. The biphasic pulses can alleviate fatigue of retina cells with the ability of charge balance , and they are much better than single-phase pulses.

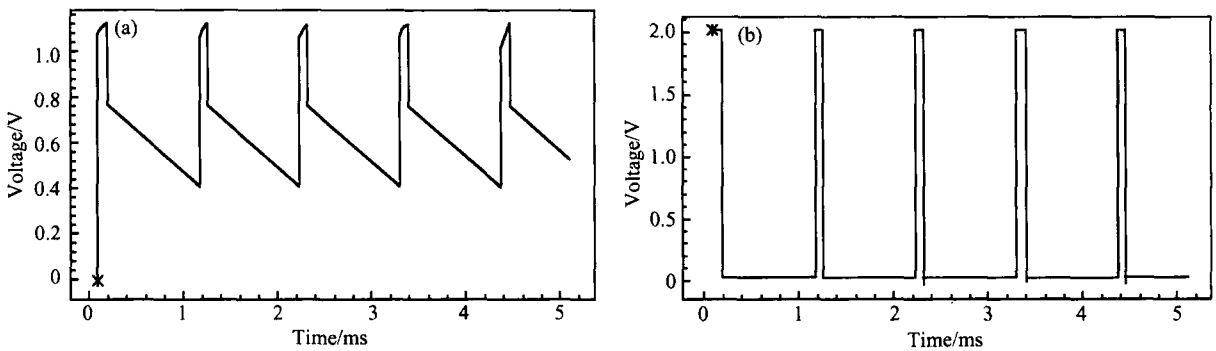

Fig. 5　Transient output waveform of PFM(I_{ph} = 20nA)

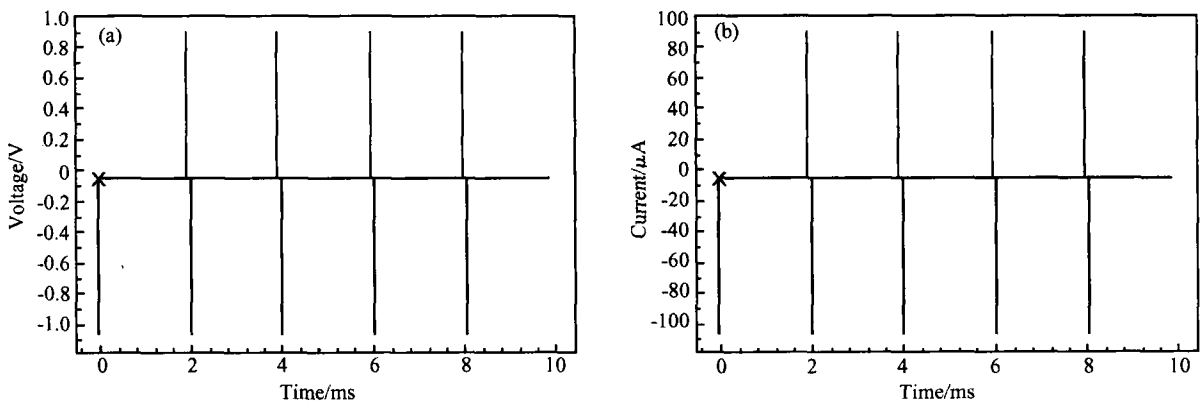

Fig. 6　Functional diagram of biphasic stimulus signal at retina

Figure 7 shows the dynamic range of the circuit. The circuit remains nearly linear for photocurrent values ranging from 1 to 30nA. When the photocurrent exceeds 30nA ,the circuit tends to fall in saturation. For photocurrents greater than 40nA , the circuit refuses to oscillate. The output pulse frequency ranges from hundreds of Hz to a few kHz ,which is suitable for retinal stimulation.

For long wavelength light ,the responsivity of PD realized in CMOS process is estimated to be about 0. 5A/ W. As the minimum photocurrent is 1nA ,the minimum optical power is 2nW ,and thus the optical sensitivity of the PFM is - 57dBm. A typical value of incident light intensity for this purpose is 2000W/ m^2 ,which is easily large enough to guarantee the oscillation of the circuit.

A test chip has been designed. The core part of the layout has an area of 70μm ×50μm , which is

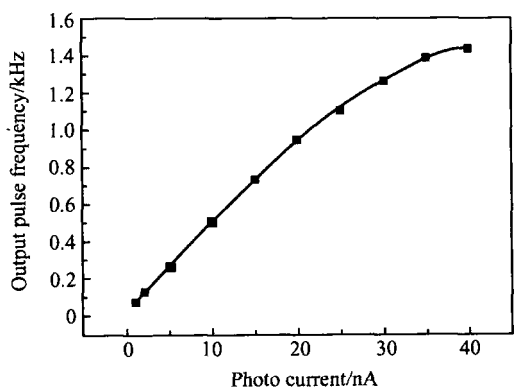

Fig. 7　Dynamic range characteristic of PFM

appropriate for integrated in arrays in high density. The layout of the full chip is shown in Fig. 8. On the left side is the PFM with PD ,while on the right side is the PFM with no PD for the purpose

of testing. A photograph of the chip is shown in Fig. 9.

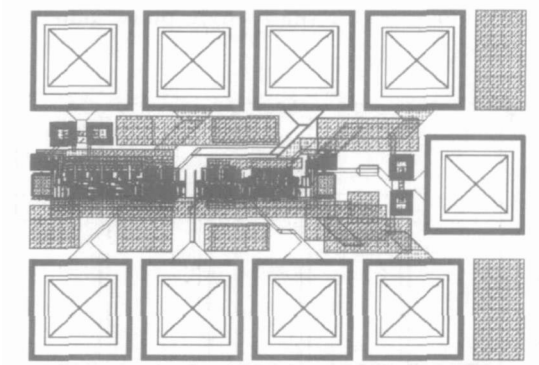

Fig. 8 Schematic of the PFM layout

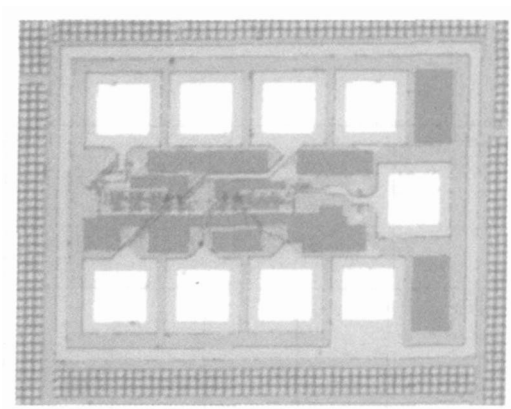

Fig. 9 Photograph of the PFM chip

5 Conclusion

We have proposed a PFM circuit applicable to sub-retinal implants. The basic structure and fundamental characteristics of the circuit have been demonstrated and analyzed. Simulation has been carried out, and the results show that it has good linearity for photocurrent values between 1 and 30nA. The preliminary simulated data and performance demonstrate the potential of integration for sub-retinal implants.

References

[1] Margalit E, Maia M, Weiland J, et al. Retinal prosthesis for the blind. Survey of Ophthalmology, 2002, 47(7/8): 335

[2] Zrenner E. Will retinal implants restore vision? Science, 2002, 295(8): 1022

[3] Kagawa K, Isakari K, Furumiya T, et al. Pixel design of pulsed CMOS image sensor for retinal prosthesis with digital photosensitivity control. Electron Lett, 2003, 39(3): 419

[4] Uehara A, Pan Y L, Kagawa K, et al. Micro-sized photo-detecting stimulator array for retinal prosthesis by distributed sensor network approach. Sensors and Actuators A, 2005, 120(4): 78

[5] Furumiya T, David C N, Yasuoka K, et al. Functional verification of pulse frequency modulation-based image sensor for retinal prosthesis by in vitro electrophysiological experiments using frog retina. Biosensors and Bioelectronics, In Press, Corrected Proof, Available online, 2005

[6] Tokuda T, Pan L Y, Uehara A, et al. Flexible and extendible neural interface device based on cooperative multi-chip CMOS LSI architecture. Sensors and Actuators A, 2005, 122(7): 88

[7] Liu W T, Vichienchom K, Clements M, et al. A neuro-stimulus chip with telemetry unit for retinal prosthetic device. IEEE J Solid-State Circuits, 2000, 35(10): 1487

[8] Ziegler D, Linderholm P, Mazza M, et al. An active microphotodiode array of oscillating pixels for retinal stimulation. Sensors and Actuators A, 2004, 110(9): 11

用于视网膜修复的光电脉冲频率调制电路*

刘金彬† 陈弘达 高 鹏 裴为华 隋晓红

(中国科学院半导体研究所 集成光电子学国家重点实验室, 北京 100083)

摘要: 提出了一种用于视网膜修复的脉冲频率调制电路结构. 该电路产生频率正比于入射光强度的电脉冲序列. 论证分析了该电路的基本特性, 并基于 0.6μm CMOS 工艺进行了流片. 仿真结果表明, 该电路可以应用于视网膜下植入.

关键词: 视网膜修复; 视网膜下植入; 脉冲频率调制

EEACC: 4250; 2570D

中图分类号: TN36 **文献标识码**: A **文章编号**: 0253-4177(2006)04-0700-05

*国家自然科学基金(批准号:60536030)和国家高技术研究发展计划(批准号:2005AA311030)资助项目

† 通信作者. Email: jinbinliu@semi.ac.cn

2005-11-15 收到, 2006-01-20 定稿